BAR Ø16 · SMALL

OVERVIEW	Designer | Year	Hakumei | 2026
	Dimensions	Ø16 × H6 cm
	Weight	approx. 0.28 kg complete (28 g printed)
	Material	Shade: translucent PLA.
	Origin	Designed and printed in Malaysia
	Assembly	One printed piece
	Colours	Shade: any of 5 translucent colours
ILLUMINATION	Light source	LED, E27 G45 golf-ball bulb, included
	Light output	approx. 500 lm
	Colour temperature	2700 K
	CRI	approx. 80+
	Life hours	approx. 15,000
POWER	Input	220–240 V AC; 110–120 V for Canada and Taiwan
	Max. usage	approx. 6 W
	Connection	Wired to a ceiling point by a qualified electrician
DIMMING	Not dimmable as supplied.	
SUSPENSION	Cord	2 m twisted fabric, adjustable drop
	Ceiling rose	Replaces the existing fitting
	Lampholder	E27
CARE	Indoor use only. Dust with a dry cloth or a soft brush; keep acetone, solvents and harsh cleaners away from the printed parts. LED bulbs only, never incandescent or halogen: they run far hotter than a printed lamp is made for. Keep out of hot direct sun.	
MATERIALITY	Printed to order, one fine layer at a time, so faint layer lines are part of the surface. Tint can vary slightly between spools: for lamps that must match, order them together.	

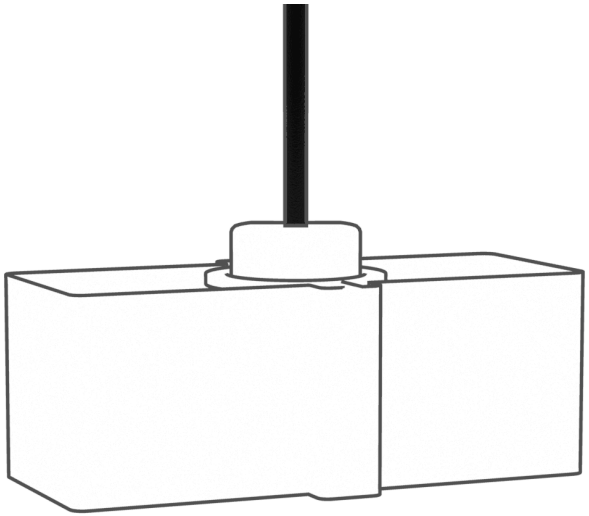

Figures marked approx. are typical of the bulb and fittings supplied and are confirmed against the first lamps made. Specifications may change.

BAR Ø20 · MEDIUM

OVERVIEW	Designer | Year	Hakumei | 2026
	Dimensions	Ø20 × H7.5 cm
	Weight	approx. 0.30 kg complete (43 g printed)
	Material	Shade: translucent PLA.
	Origin	Designed and printed in Malaysia
	Assembly	One printed piece
	Colours	Shade: any of 5 translucent colours
ILLUMINATION	Light source	LED, E27 A60 bulb, included
	Light output	approx. 600 lm
	Colour temperature	2700 K
	CRI	approx. 80+
	Life hours	approx. 15,000
POWER	Input	220–240 V AC; 110–120 V for Canada and Taiwan
	Max. usage	approx. 6 W
	Connection	Wired to a ceiling point by a qualified electrician
DIMMING	Not dimmable as supplied.	
SUSPENSION	Cord	2 m twisted fabric, adjustable drop
	Ceiling rose	Replaces the existing fitting
	Lampholder	E27
CARE	Indoor use only. Dust with a dry cloth or a soft brush; keep acetone, solvents and harsh cleaners away from the printed parts. LED bulbs only, never incandescent or halogen: they run far hotter than a printed lamp is made for. Keep out of hot direct sun.	
MATERIALITY	Printed to order, one fine layer at a time, so faint layer lines are part of the surface. Tint can vary slightly between spools: for lamps that must match, order them together.	

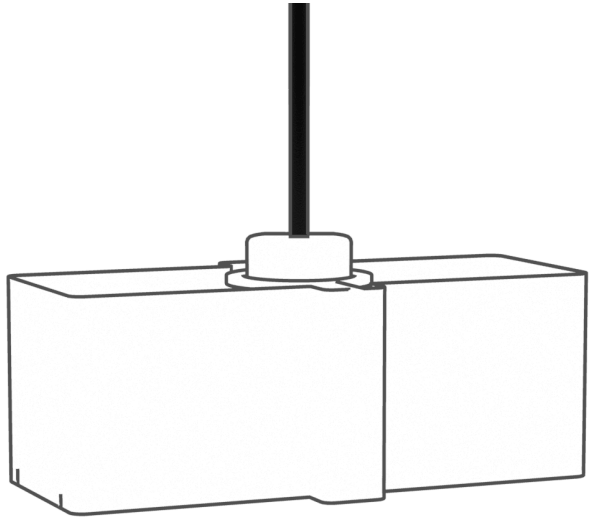

Figures marked approx. are typical of the bulb and fittings supplied and are confirmed against the first lamps made. Specifications may change.

BAR Ø24 · LARGE

OVERVIEW	Designer | Year	Hakumei | 2026
	Dimensions	Ø24 × H9 cm
	Weight	approx. 0.32 kg complete (61 g printed)
	Material	Shade: translucent PLA.
	Origin	Designed and printed in Malaysia
	Assembly	One printed piece
	Colours	Shade: any of 5 translucent colours
ILLUMINATION	Light source	LED, E27 A60 bulb, included
	Light output	approx. 600 lm
	Colour temperature	2700 K
	CRI	approx. 80+
	Life hours	approx. 15,000
POWER	Input	220–240 V AC; 110–120 V for Canada and Taiwan
	Max. usage	approx. 6 W
	Connection	Wired to a ceiling point by a qualified electrician
DIMMING	Not dimmable as supplied.	
SUSPENSION	Cord	2 m twisted fabric, adjustable drop
	Ceiling rose	Replaces the existing fitting
	Lampholder	E27
CARE	Indoor use only. Dust with a dry cloth or a soft brush; keep acetone, solvents and harsh cleaners away from the printed parts. LED bulbs only, never incandescent or halogen: they run far hotter than a printed lamp is made for. Keep out of hot direct sun.	
MATERIALITY	Printed to order, one fine layer at a time, so faint layer lines are part of the surface. Tint can vary slightly between spools: for lamps that must match, order them together.	

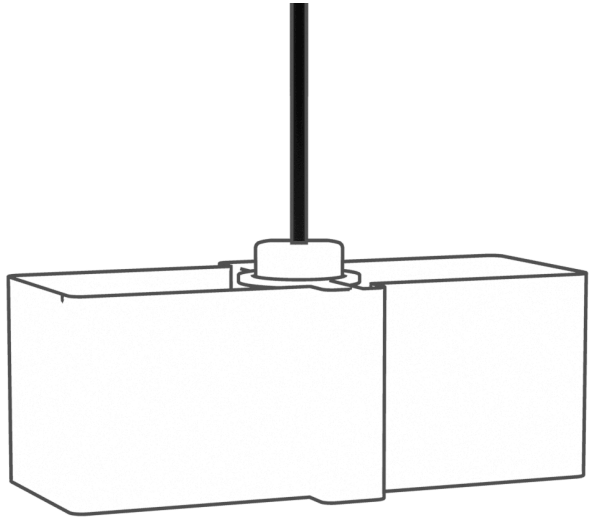

Figures marked approx. are typical of the bulb and fittings supplied and are confirmed against the first lamps made. Specifications may change.